BARCODE INFO

Barcode Type:	EAN 13
Code Value:	4002448069256
Magnification:	85 %
Overall Height:	20.12 mm
Bar Height:	17.5 mm
BWR Applied:	0 Micrometre

CUSTOMER INFO:
UNAPPROVED IMAGES!
Important Please Read:
Retouching has **not** been approved on this Artwork. Data will not be made until image approval.

CUSTOMER INFO
Minimum Point Size =6.00pt

RB Artwork and Print Specification

Trident Reference No:	RB571444
ZEN Ref:	**TR2905807**
BrandWork Ref:	**RBL2304404**
Action:	**B**
Brand:	Durex Play
Category:	Toys
Segment Group:	Pleasure Ring
Segment:	Pleasure Ring
Pack Size:	1 Pack
Market/Country:	DACH
Date:	06/07/2023
RBH Contact:	Liara Sousa

Artwork Type: BW Commercial

Component Code (2D if applicable):	**3276668**
2nd Component Code (if applicable):	**N/A**
Parent Technical Packaging Specification:	D8253269
Finished Goods Code:	**3265775**
Supply Point:	3P Odeco
3rd Party Code:	N/A
Pharmacode No/NE:	N/A
Edgemark Position:	N/A
CAD Cam Ref:	Dur-Crt-D8253269-91.5x76x31mm
Printer:	Generic RB
Substrate:	Carton Board - White

Technical & Non Printing Items
Deline
Deline 2 (if applicable)
Guides
Guides 2 (if applicable)

Colours
Carton

Magenta	Yellow	Cyan	PANTONE 2146 C
PANTONE Mix for 1	Matt. Varnish	Varnish Gloss	Emboss

Reverse Print
PANTONE 2146 C

reckitt

TRIDENT
Connaught House, Connaught Road, Kingswood Business Park, Hull, HU7 3AP, England.
T:+44 (0) 01482 828100

Please note that any low resolution paper Canon colour copies associated with this job should be referred to for content, layout and colour separation only.

UNDER NO CIRCUMSTANCES SHOULD THIS ARTWORK BE ALTERED WITHOUT PRIOR PERMISSION FROM TRIDENT.

STUDIO USE ONLY Claire Hagues **v2.0**

CUSTOMER INFO:

UNAPPROVED IMAGES!
Important Please Read:
Retouching has **not** been approved on this Artwork.
Data will not be made until image approval.

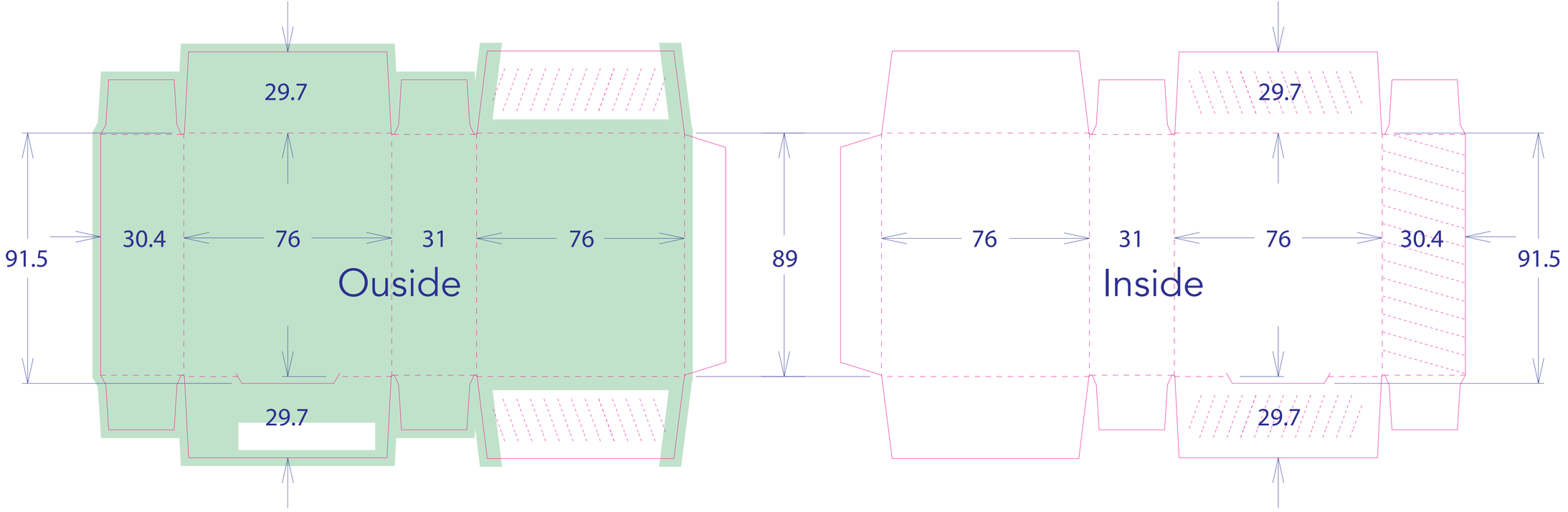

RB Artwork and Print Specification

Trident Reference No:	RB571444
ZEN Ref:	**TR2905807**
BrandWork Ref:	**RBL2304404**
Action:	**B**
Brand:	Durex Play
Category:	Toys
Segment Group:	Pleasure Ring
Segment:	Pleasure Ring
Pack Size:	1 Pack
Market/Country:	DACH
Date:	06/07/2023
RBH Contact:	Liara Sousa

Artwork Type: BW Commercial

Component Code (2D if applicable):	**3276668**
2nd Component Code (if applicable):	**N/A**
Parent Technical Packaging Specification:	D8253269
Finished Goods Code:	**3265775**
Supply Point:	3P Odeco
3rd Party Code:	N/A
Pharmacode No/NE:	N/A
Edgemark Position:	N/A
CAD Cam Ref:	Dur-Crt-D8253269-91.5x76x31mm
Printer:	Generic RB
Substrate:	Carton Board - White

Technical & Non Printing Items
- Dieline
- Dieline 2 (if applicable)
- Guides
- Guides 2 (if applicable)

Colours
Carton
- Magenta
- Yellow
- Cyan
- PANTONE 2185C
- INDIGENeMe Bl
- Matt_Varnish
- Varnish_Gloss
- Emboss

Reverse Print
- PANTONE 2185C

reckitt

TRIDENT

Connaught House, Connaught Road,
Kingswood Business Park, Hull, HU7 3AP, England.
T:+44 (0) 01482 828100

Please note that any low resolution paper Canon colour copies associated with this job should be referred to for content, layout and colour separation only.

UNDER NO CIRCUMSTANCES SHOULD THIS ARTWORK BE ALTERED WITHOUT PRIOR PERMISSION FROM TRIDENT.

STUDIO USE ONLY Claire Hagues **v2.0**

BARCODE INFO

Barcode Type:	EAN 13
Code Value:	4002448069256
Magnification:	85 %
Overall Height:	20.12 mm
Bar Height:	17.5 mm
BWR Applied:	0 Micrometre

CUSTOMER INFO:

UNAPPROVED IMAGES!
Important Please Read:
Retouching has **not** been approved on this Artwork.
Data will not be made until image approval.

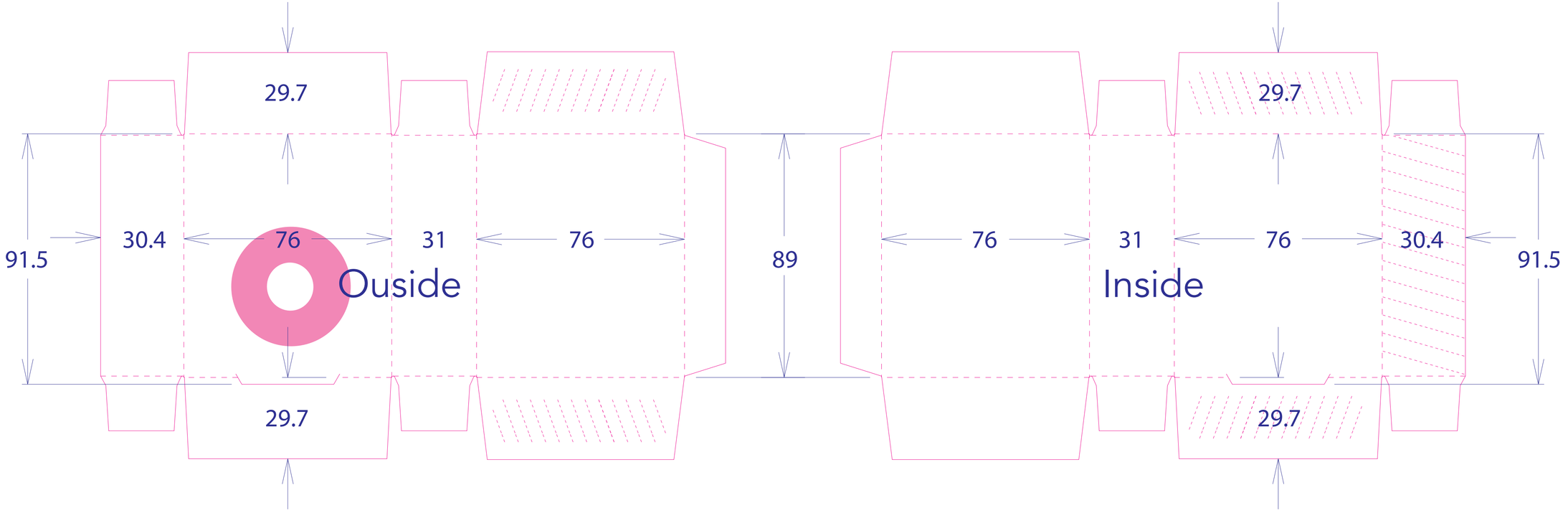

RB Artwork and Print Specification

Trident Reference No:	RB571444
ZEN Ref:	**TR2905807**
BrandWork Ref:	**RBL2304404**
Action:	**B**
Brand:	Durex Play
Category:	Toys
Segment Group:	Pleasure Ring
Segment:	Pleasure Ring
Pack Size:	1 Pack
Market/Country:	DACH
Date:	06/07/2023
RBH Contact:	Liara Sousa

Artwork Type: BW Commercial

Component Code (2D if applicable):	**3276668**
2nd Component Code (if applicable):	**N/A**
Parent Technical Packaging Specification:	D8253269
Finished Goods Code:	**3265775**
Supply Point:	3P Odeco
3rd Party Code:	N/A
Pharmacode No/NE:	N/A
Edgemark Position:	N/A
CAD Cam Ref:	Dur-Crt-D8253269-91.5x76x31mm
Printer:	Generic RB
Substrate:	Carton Board - White

Technical & Non Printing Items
- Dieline
- Dieline 2 (if applicable)
- Guides
- Guides 2 (if applicable)

Colours
Carton

Magenta	Yellow	Cyan	PANTONE 2187C
C 0 M 100 Y 0 K 0	C 0 M 0 Y 100 K 0	C 100 M 0 Y 0 K 0	C 100 M 100 Y 0 K 0

1805E Silk Ref	Matt_Varnish	Varnish_Gloss	Emboss
C 100 M 100 Y 0 K 0	C 0 M 0 Y 0 K 0	C 0 M 0 Y 0 K 0	C 0 M 0 Y 0 K 0

Reverse Print

PANTONE 2187C
C 100 M 100 Y 0 K 0

reckitt

TRIDENT

Connaught House, Connaught Road,
Kingswood Business Park, Hull, HU7 3AP, England.
T:+44 (0) 01482 828100

Please note that any low resolution paper Canon colour copies associated with this job should be referred to for content, layout and colour separation only.

UNDER NO CIRCUMSTANCES SHOULD THIS ARTWORK BE ALTERED WITHOUT PRIOR PERMISSION FROM TRIDENT.

STUDIO USE ONLY Claire Hagues **v2.0**

BARCODE INFO

Barcode Type:	EAN 13
Code Value:	4002448069256
Magnification:	85 %
Overall Height:	20.12 mm
Bar Height:	17.5 mm
BWR Applied:	0 Micrometre

CUSTOMER INFO:
UNAPPROVED IMAGES!
Important Please Read:
Retouching has **not** been approved on this Artwork.
Data will not be made until image approval.

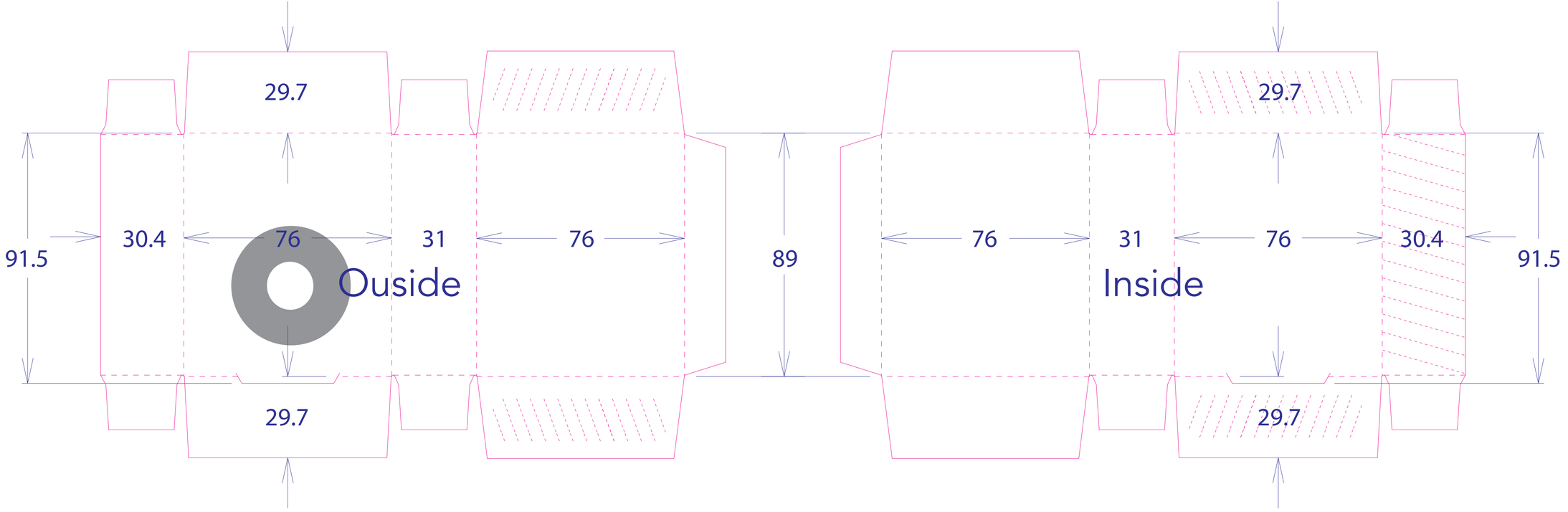

RB Artwork and Print Specification

Trident Reference No:	RB571444
ZEN Ref:	**TR2905807**
BrandWork Ref:	**RBL2304404**
Action:	**B**
Brand:	Durex Play
Category:	Toys
Segment Group:	Pleasure Ring
Segment:	Pleasure Ring
Pack Size:	1 Pack
Market/Country:	DACH
Date:	06/07/2023
RBH Contact:	Liara Sousa

Artwork Type: BW Commercial

Component Code (2D if applicable):	**3276668**
2nd Component Code (if applicable):	**N/A**
Parent Technical Packaging Specification:	D8253269
Finished Goods Code:	**3265775**
Supply Point:	3P Odeco
3rd Party Code:	N/A
Pharmacode No/NE:	N/A
Edgemark Position:	N/A
CAD Cam Ref:	Dur-Crt-D8253269-91.5x76x31mm
Printer:	Generic RB
Substrate:	Carton Board - White

Technical & Non Printing Items

- Dieline
- Dieline 2 (if applicable)
- Guides
- Guides 2 (if applicable)

Colours

Carton

Magenta	Yellow	Cyan	PANTONE 2148 C
1	1	1	1
1	1	1	1

PANTONE Infra Blue C	Matt_Varnish	Varnish_Gloss	Emboss
5	4	3	8
1	1	1	1

Reverse Print

PANTONE 2148 C
1
1

reckitt

TRIDENT

Connaught House, Connaught Road,
Kingswood Business Park, Hull, HU7 3AP, England.
T: +44 (0) 01482 828100

Please note that any low resolution paper Canon colour copies associated with this job should be referred to for content, layout and colour separation only.

UNDER NO CIRCUMSTANCES SHOULD THIS ARTWORK BE ALTERED WITHOUT PRIOR PERMISSION FROM TRIDENT.

STUDIO USE ONLY Claire Hagues **v2.0**

BARCODE INFO

Barcode Type:	EAN 13
Code Value:	4002448069256
Magnification:	85 %
Overall Height:	20.12 mm
Bar Height:	17.5 mm
BWR Applied:	0 Micrometre

Production line(s)		
Manufacturing site		
Pack Tech approver	1st	2nd
Date		

Check Criteria	Details & Comments	Checks 1st	Checks 2nd
Approvals			
3rd Party Approval	☐ N/A	☐ Pass	☐ Pass
Technical Drawing/Cutter ref no./Legend box			
Component item code correct on artwork	☐ N/A	☐ Pass	☐ Pass
Correct D-spec and drawing for the production line	☐ N/A	☐ Pass	☐ Pass
Profile shape & dimensions	☐ N/A	☐ Pass	☐ Pass
Graphics layout/orientation	☐ N/A	☐ Pass	☐ Pass
Unwind diagram (PPTD1022/1-20)	☐ N/A	☐ Pass	☐ Pass
Printable areas/bleed	☐ N/A	☐ Pass	☐ Pass
Varnish free areas	☐ N/A	☐ Pass	☐ Pass
Variable coding position & dimensions			
Varnish and print requirements	☐ N/A	☐ Pass	☐ Pass
Pre-printed headers (alignment and suitability)	☐ N/A	☐ Pass	☐ Pass
Embossing and foil blocking	☐ N/A	☐ Pass	☐ Pass
Separations on artwork (Braille/Varnish/etc.)	☐ N/A	☐ Pass	☐ Pass
Alignment within cutter	☐ N/A	☐ Pass	☐ Pass
Braille structure (position/start cell/end cell)	☐ N/A	☐ Pass	☐ Pass
Verification Code Type: Pharma Code / 2D / OLV			
Bar sequence and/or number correct and in correct position	☐ N/A	☐ Pass	☐ Pass
2D barcode decode contains correct item code	☐ N/A	☐ Pass	☐ Pass
Size (height, width, spacing, font)	☐ N/A	☐ Pass	☐ Pass
Direction of read	☐ N/A	☐ Pass	☐ Pass
Light margins and print free areas	☐ N/A	☐ Pass	☐ Pass
Colour	☐ N/A	☐ Pass	☐ Pass
Repeat distance (reeled material)	☐ N/A	☐ Pass	☐ Pass
Cross check related docs ie CPBOM	☐ N/A	☐ Pass	☐ Pass
Bar code Type; EAN, ITF, Code39, etc			
Magnification / width and height	☐ N/A	☐ Pass	☐ Pass
Colour (e.g. black print on white background)	☐ N/A	☐ Pass	☐ Pass
Light margins & indicators	☐ N/A	☐ Pass	☐ Pass
Bearer bars & H gauges (if required)	☐ N/A	☐ Pass	☐ Pass
Bar code number (human readable)	☐ N/A	☐ Pass	☐ Pass
Bar code number (encoded & hidden data)	☐ N/A	☐ Pass	☐ Pass
Confirm bar code number from source	☐ N/A	☐ Pass	☐ Pass
Photo-electric cell mark / edge marks			
Present & per Tech drawing	☐ N/A	☐ Pass	☐ Pass
Correct pitch	☐ N/A	☐ Pass	☐ Pass
Additional markings			
e-mark, recycle logo etc	☐ N/A	☐ Pass	☐ Pass
Additional information			
Correct printer	☐ N/A	☐ Pass	☐ Pass
Correct Substrate	☐ N/A	☐ Pass	☐ Pass
Edge mark details	☐ N/A	☐ Pass	☐ Pass
Laser coding area colours and print process	☐ N/A	☐ Pass	☐ Pass
Varnish	☐ N/A	☐ Pass	☐ Pass
General details are correct	☐ N/A	☐ Pass	☐ Pass
Pass / Fail comments and Signature		☐ Pass	☐ Fail

By approving the artwork referenced within this form I authorise it for release to the print supplier

Additional Comments

Version 005 20/09/2022

RB Artwork and Print Specification

Trident Reference No:	RB571444
ZEN Ref:	**TR2905807**
BrandWork Ref:	**RBL2304404**
Action:	**B**
Brand:	Durex Play
Category:	Toys
Segment Group:	Pleasure Ring
Segment:	Pleasure Ring
Pack Size:	1 Pack
Market/Country:	DACH
Date:	06/07/2023
RBH Contact:	Liara Sousa

Artwork Type: BW Commercial

Component Code (2D if applicable):	**3276668**
2nd Component Code (if applicable):	**N/A**
Parent Technical Packaging Specification:	D8253269
Finished Goods Code:	**3265775**
Supply Point:	3P Odeco
3rd Party Code:	N/A
Pharmacode No/NE:	N/A
Edgemark Position:	N/A
CAD Cam Ref:	Dur-Crt-D8253269-91.5x76x31mm
Printer:	Generic RB
Substrate:	Carton Board - White

Technical & Non Printing Items

- Dieline
- Dieline 2 (if applicable)
- Guides
- Guides 2 (if applicable)

Colours Carton

Magenta	Yellow	Cyan	PANTONE 2146 C
PANTONE Mix for	Matt Varnish	Varnish Gloss	Emboss

Reverse Print

PANTONE 2146 C

reckitt

TRIDENT

Connaught House, Connaught Road,
Kingswood Business Park, Hull, HU7 3AP, England.
T:+44 (0) 01482 828100

Please note that any low resolution paper Canon colour copies associated with this job should be referred to for content, layout and colour separation only.

UNDER NO CIRCUMSTANCES SHOULD THIS ARTWORK BE ALTERED WITHOUT PRIOR PERMISSION FROM TRIDENT.

STUDIO USE ONLY Claire Hagues **v2.0**